ELECENG 2EI4 - Electronic Devices & Circuits I

Project 4 - CMOS XOR Gate

Mark Le - 400558145

Instructor: Dr. Yaser M. Haddara

Term: Winter 2026

Submission Deadline: Sunday, April 5, 2026

Statement of Originality: As a future member of the engineering profession, the student is responsible for performing the required work in an honest manner, without plagiarism and cheating. Submitting this work with my name and student number is a statement and understanding that this work is my own and adheres to the Academic Integrity Policy of McMaster University and the Code of Conduct of the Professional Engineers of Ontario. Submitted by **Mark Le, lek37, 400558145**

Table of Contents

1 Circuit Schematics & Sizing **2**

1.1 Circuit Schematics 2

1.2 Ideal Sizing 3

1.3 Ideal Sizing Feasibility 4

2 Testing on AD3 **4**

2.1 Functional Testing 4

2.2 Static Level Testing 5

3 Timing **7**

1 Circuit Schematics & Sizing

1.1 Circuit Schematics

For an XOR gate $Y = A \oplus B$, we can derive the Boolean function in terms of AND, OR, and NOT operations:

Truth table:

A	B	Y
0	0	0
0	1	1
1	0	1
1	1	0

Next, we can derive the Boolean expression to be able to implement the CMOS gate easier, using knowledge from **COMPENG 2DI4 - Logic Design** course

$$Y = A \oplus B$$

$$Y = A'B + AB' \qquad \text{equivalency}$$

$$Y = [(A'B + AB')']' \qquad \text{double inversion}$$

$$Y = [(A'B)'(AB')']' \qquad \text{DeMorgan's Theorem}$$

$$Y = [(A + B')(A' + B)]' \qquad \text{DeMorgan's Theorem}$$

$$Y = (AA' + AB + A'B' + BB')' \qquad \text{expanding}$$

$$\boxed{Y = (AB + A'B')'}$$

CMOS circuit schematics:

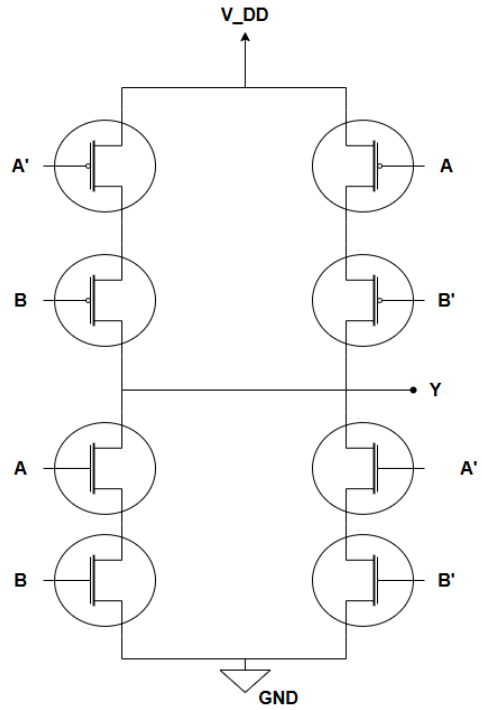

XOR CMOS schematics

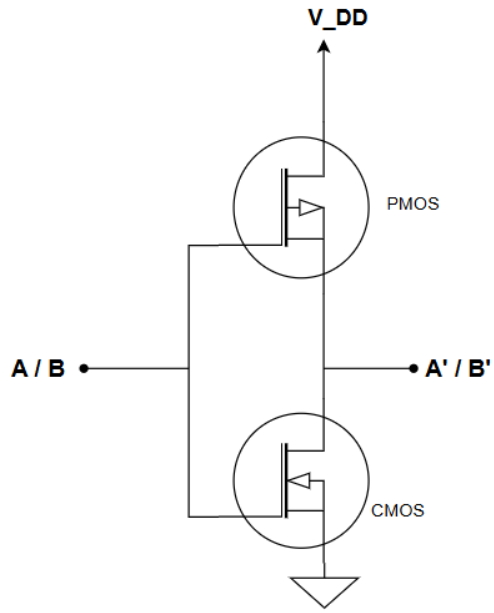

CMOS Inverter

1.2 Ideal Sizing

For this CMOS network, it can be seen that the pull-up network (PUN) and the pull-down network (PDN) are symmetrical. Therefore, the design must ensures that both networks have equal propagation delays, and minimizing the total delays of the whole network. It is known that the electron mobility of the NMOS is almost 2.5 times larger than PMOS, means that NMOS conducts 2.5 betters than PMOS. To compensate for the worse conducting performance of the PMOS, PMOS must be sized larger than NMOS. Thus, this results in $(W/L)_p = 5$ and $(W/L)_n = 2$.

Also from the CMOS-based XOR network above, the longest path for both PDN and PUN network involves two transistors in series. Therefore, the total network R_{eq} for each network is halved, which leads to $n/2$ for PDN and $p/2$ for PUN.

As discussed, this design must ensures equal propagation delays for both PUN and PDN network, therefore:

$$\frac{2P}{2N} = \frac{5}{2} = 2.5 \Rightarrow \frac{P}{N} = 2.5$$

So the size of the PMOS must be approximately 2.5 times larger than NMOS size in order to acheive minimum propagation delay.

1.3 Ideal Sizing Feasibility

In the scope of this course, ELECENG 2EI4, the ideal sizing is unfortunately couldn't happen. This is because the NMOS and the PMOS in the kit has fixed value of width and length, and therefore it is expected that the minimum propagation delay may or may not happen, since we can't control the sizing.

2 Testing on AD3

Circuit built on breadboard:

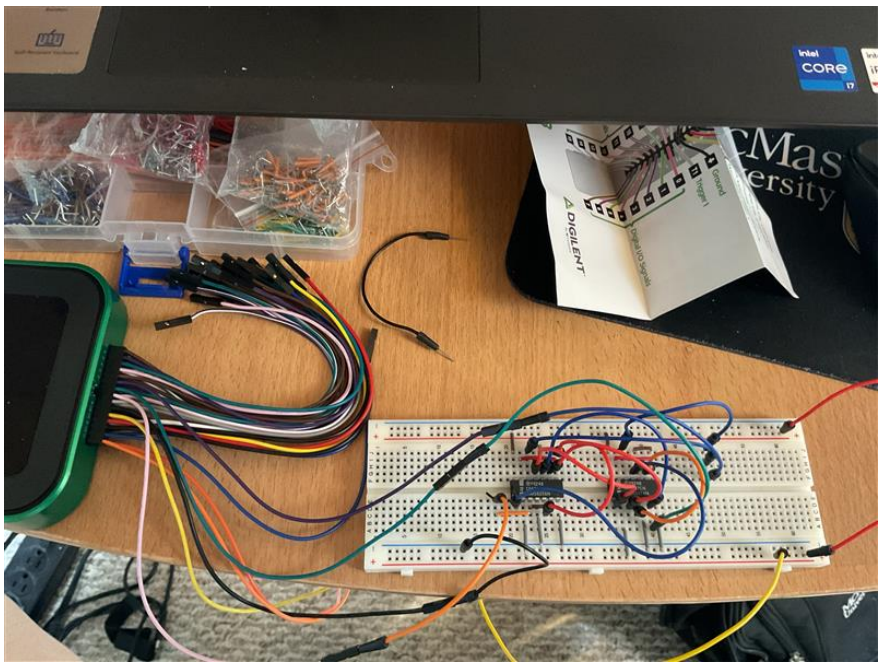

2.1 Functional Testing

For this circuit, DIO 0 probe of the AD3 is connected to input A of the XOR gate, DIO 1 probe of the AD3 is connected to input B of the AD3, and DIO 2 probe is connected to the output Y. Then, V_{DD} is supplied by Wavegen W1 at 5V DC.

Then, the **Pattern 1** channel is configure as the following. The goal is to test the circuit with all four possible input combinations. Refer to the figure below

- DIO 0 - Input A is configured as a clock signal at 2 kHz
- DIO 1 - Input B is configured as a clock signal at 1 kHz

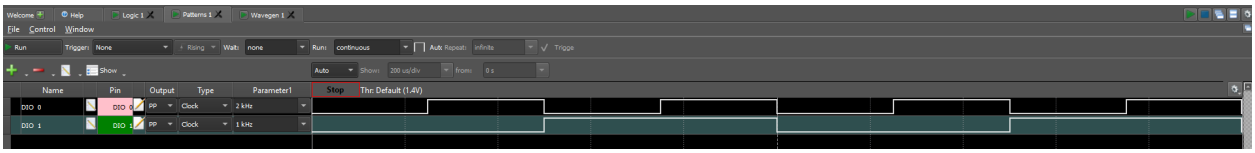

Finally, running the **Logic 1** channel produce the following output. It can be seen that the output is exactly what is expected for an XOR gate:

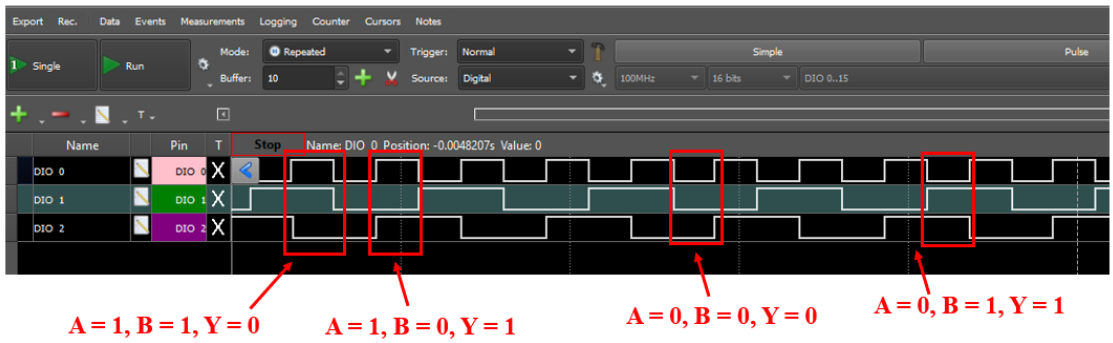

2.2 Static Level Testing

The measurement result on the below figure uses input A as the square wave from 0 - 5V, and input B is the 5V DC supply:

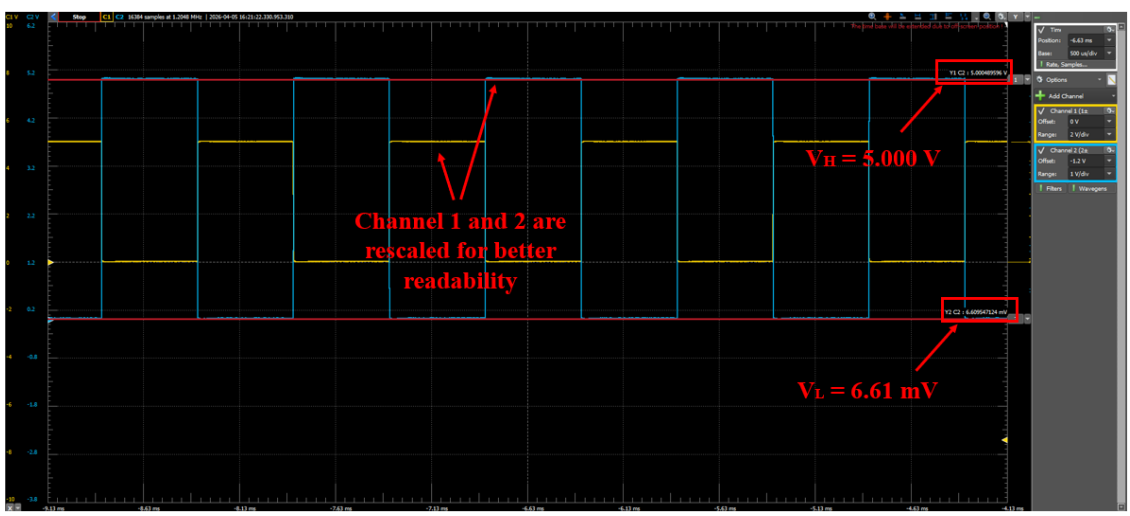

It can be seen that $V_H = 5.000V$ and $V_L = 6.61mV$, which is expected as the standard voltage for both HIGH and LOW logic.

The measurement result on the below figure uses input B as the square wave from 0 to 5V, and input B is the 5V DC supply.

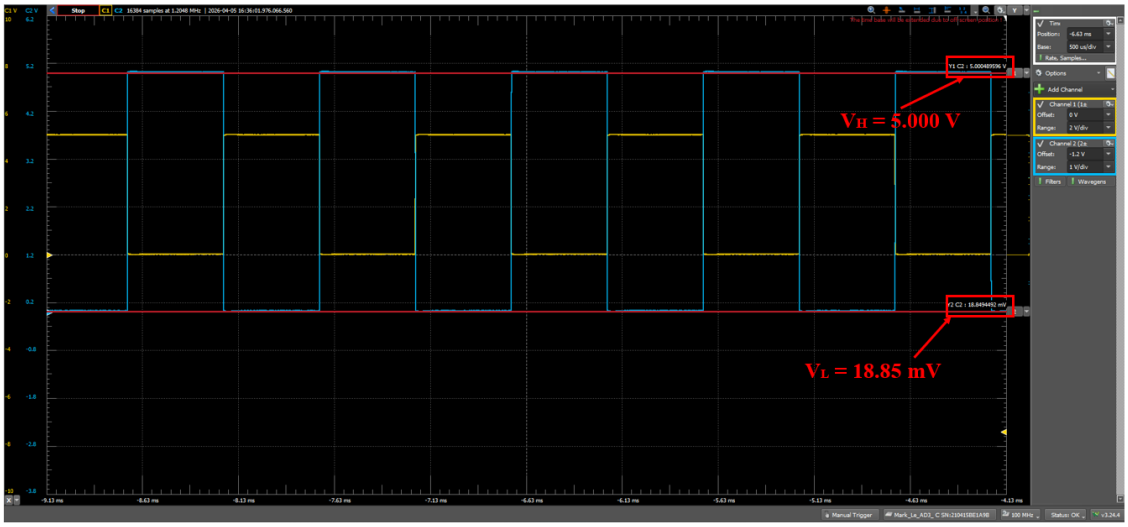

Also, it can be see that $V_H = 5.000V$ and $V_L = 18.85mV$. The value of V_L is a bit higher than V_L before, but it is still in the normal range for a standard voltage at logic LOW.

3 Timing

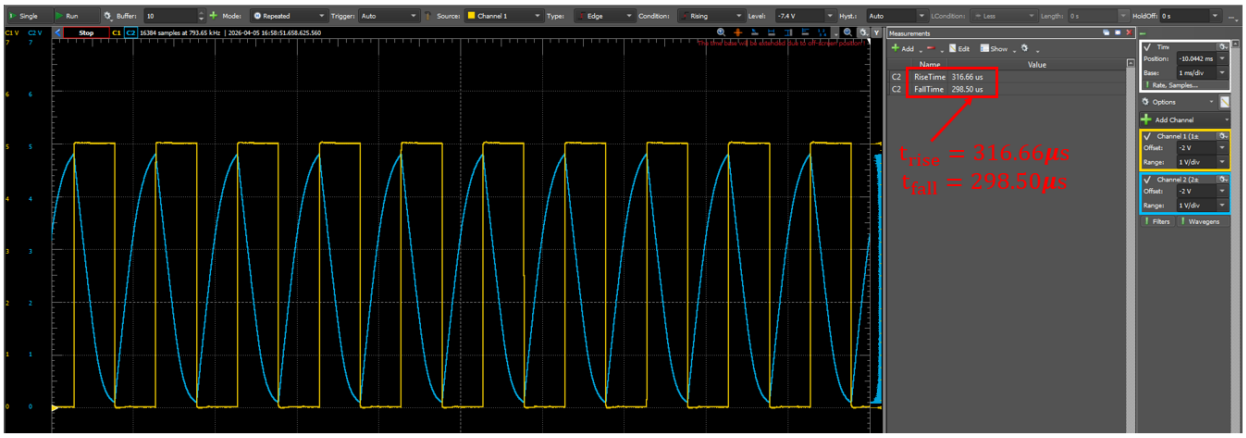

As it can be seen from the plot of voltage at output Y, the rise time is found to be $316.66\mu s$, and the fall time is found to be $298.50\mu s$.

Calculation of $\tau_{pHL}, \tau_{pLH}, \tau_p$:

To find the value of τ_{pLH}, two cursors are needed: one at the point where input (yellow) falls to 50% of the value range, and one at the moment where the output rises to 50% of the voltage range (0.1 V - 4.8V, 50% corresponding to 2.45 V), and measure the horizontal difference between the two cursor. AD3 measurement on the plot below shows that $\boxed{\tau_{pLH} = 160.24\mu s}$.

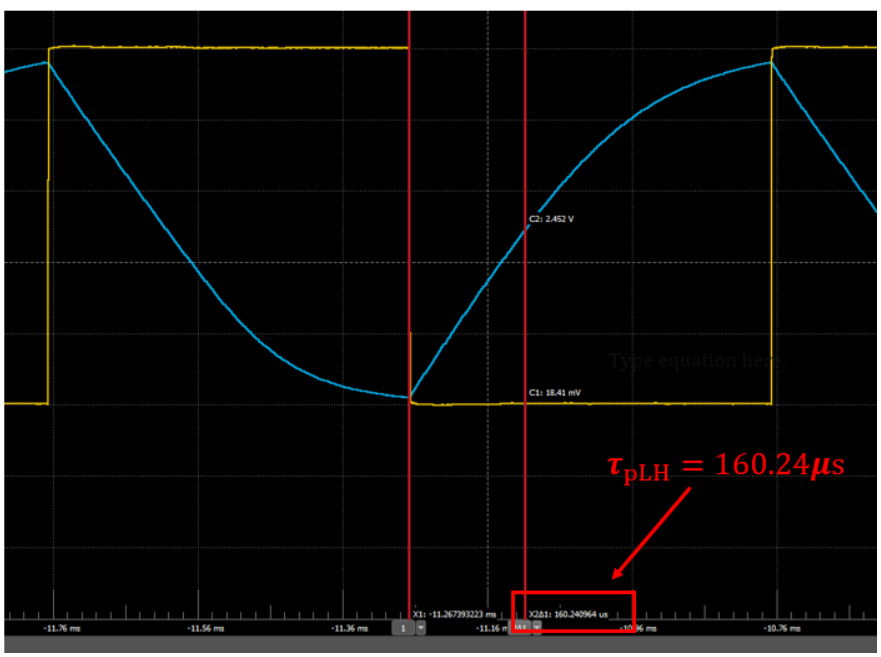

To find the value of τ_{pHL}, two cursors are needed: one at the point where input (yellow) rises to 50% of the value range (0 to 5V, 50% corresponds to 2.5 V), and one at the moment where the output falls to 50% of the voltage range (0.1 V - 4.8V, 50% corresponding to 2.45 V), and measure the horizontal difference between the two cursor. AD3 measurement on the plot below shows that $\boxed{\tau_{pHL} = 164.31\mu s}$.

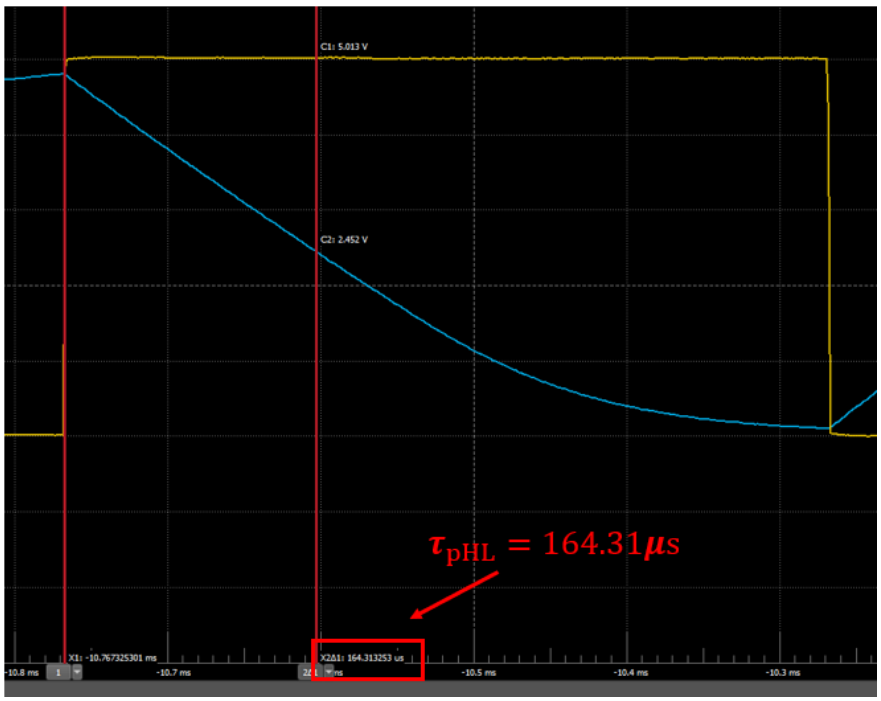

Finally, once τ_{pHL} and τ_{pLH} are obtained, the overall propagation delay τ_p is calculated by taking the mean of two those values:

$$\tau_p = \frac{\tau_{pLH} + \tau_{pHL}}{2} = \frac{160.24\mu s + 164.31\mu s}{2} = \boxed{162.28\mu s}$$